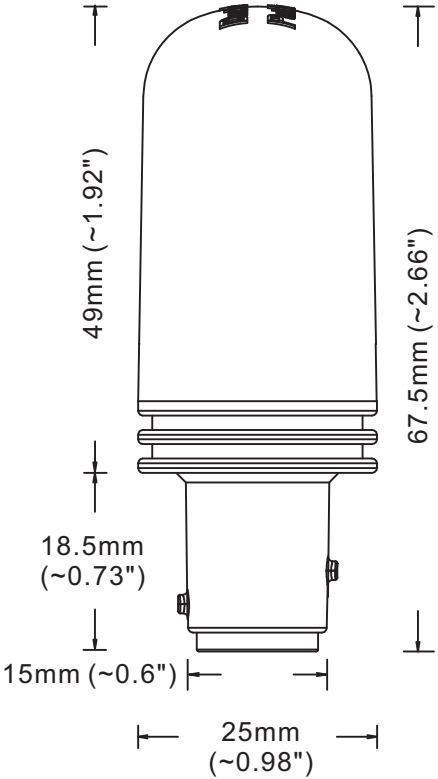
49mm (~1.92")
67.5mm (~2.66")
18.5mm
(~0.73")
15mm (~0.6")
25mm
(~0.98")