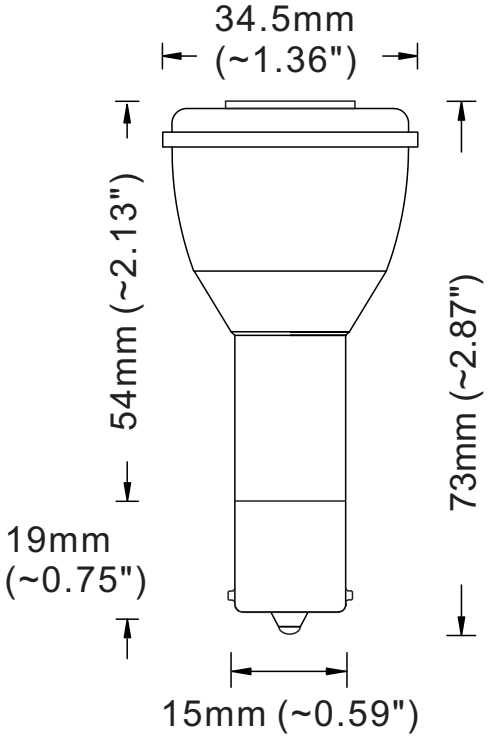
34.5mm
(~1.36")
54mm (~2.13")
73mm (~2.87")
19mm
(~0.75")
15mm (~0.59")