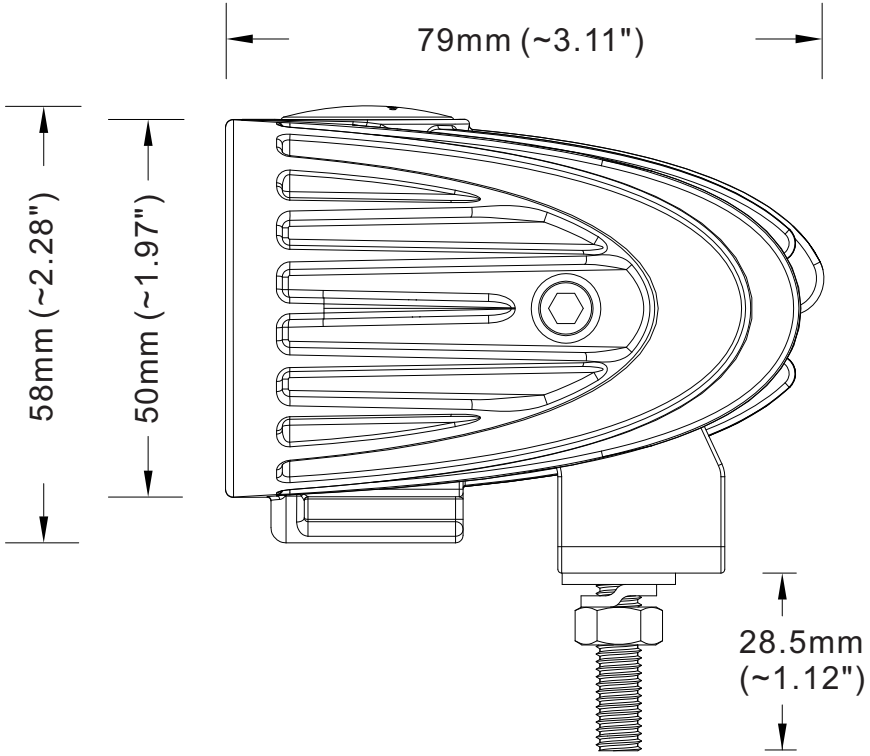
79mm (~3.11")
58mm (~2.28")
50mm (~1.97")
28.5mm
(~1.12")

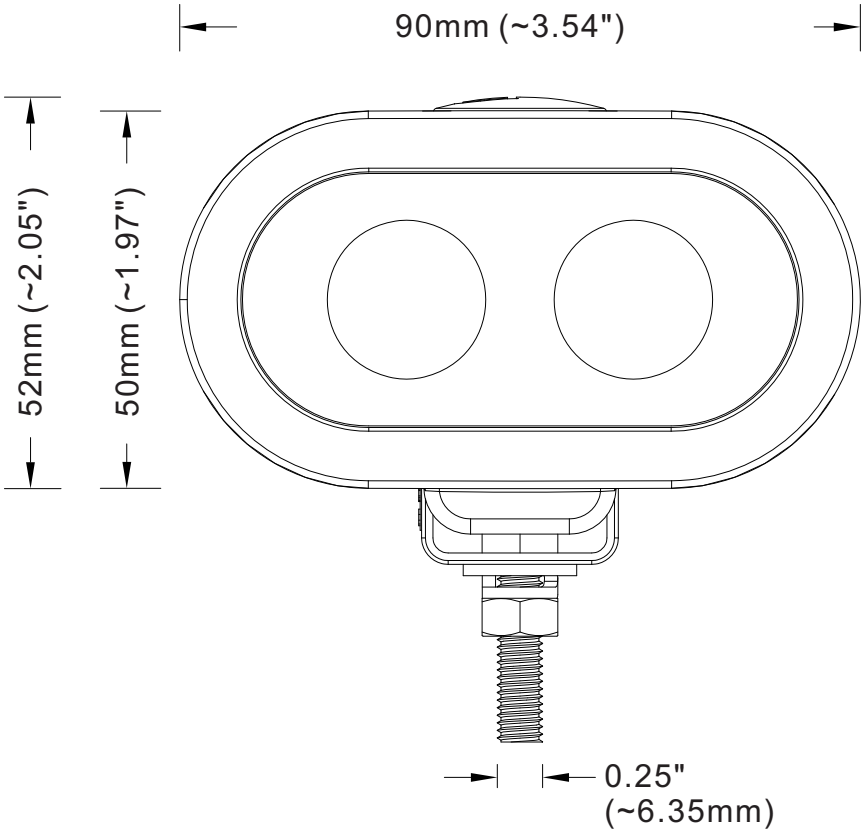
90mm (~3.54")
52mm (~2.05")
50mm (~1.97")
0.25"
(~6.35mm)