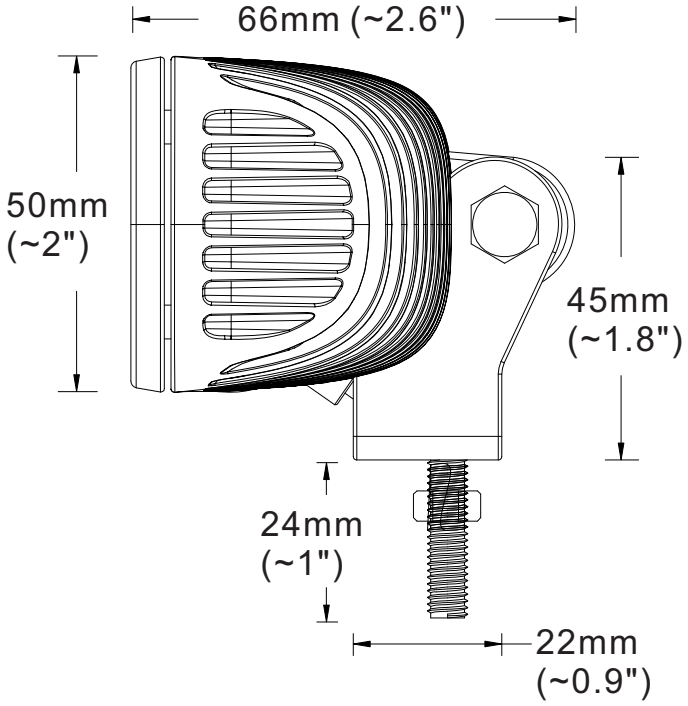
66mm (~2.6")
50mm
(~2")
45mm
(~1.8")
24mm
(~1")
22mm
(~0.9")

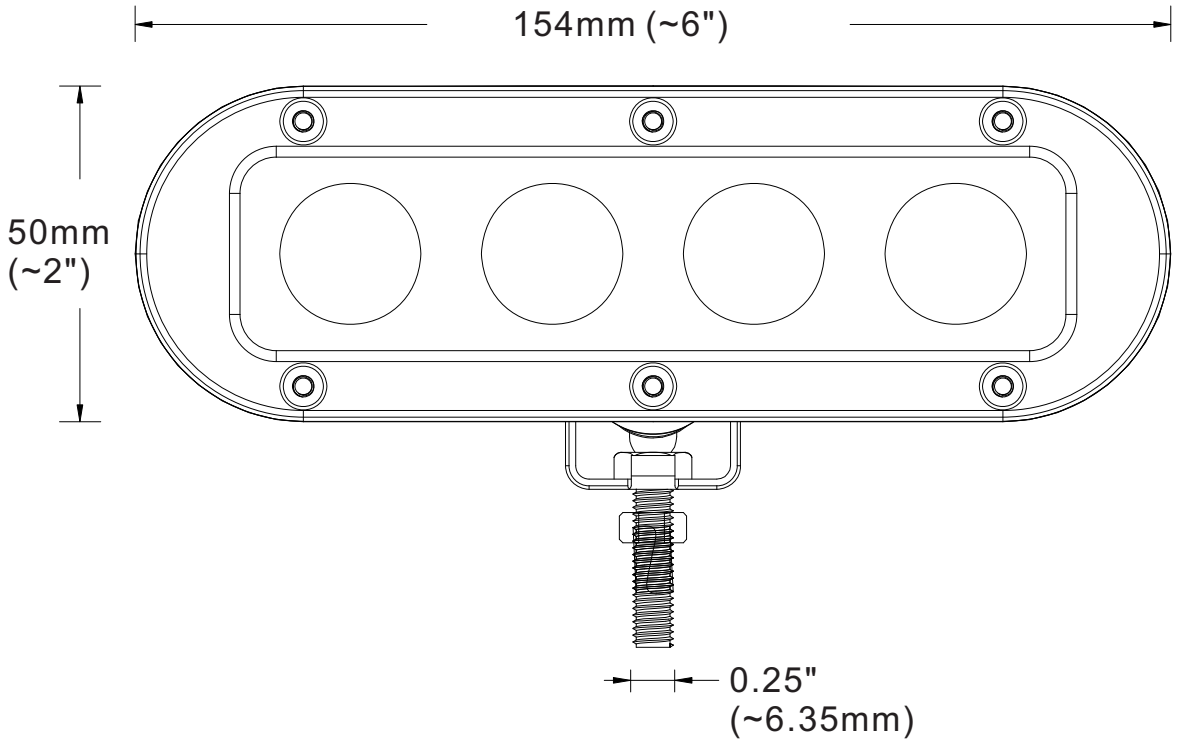
154mm (~6")
50mm
(~2")
0.25"
(~6.35mm)

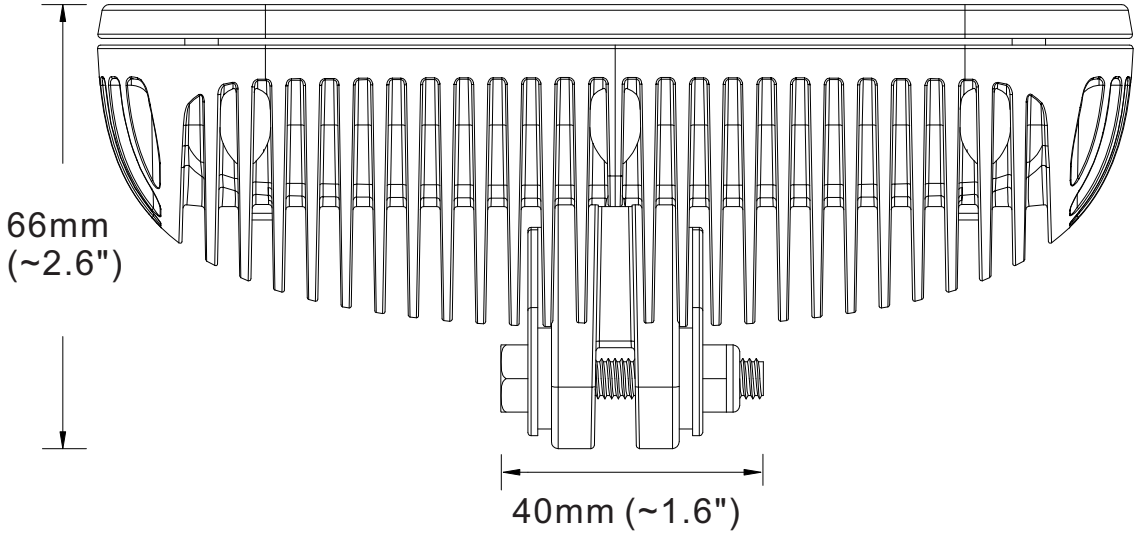
66mm
(~2.6")
40mm (~1.6")